## Yamaha Dual Engine, with Bullet Connectors

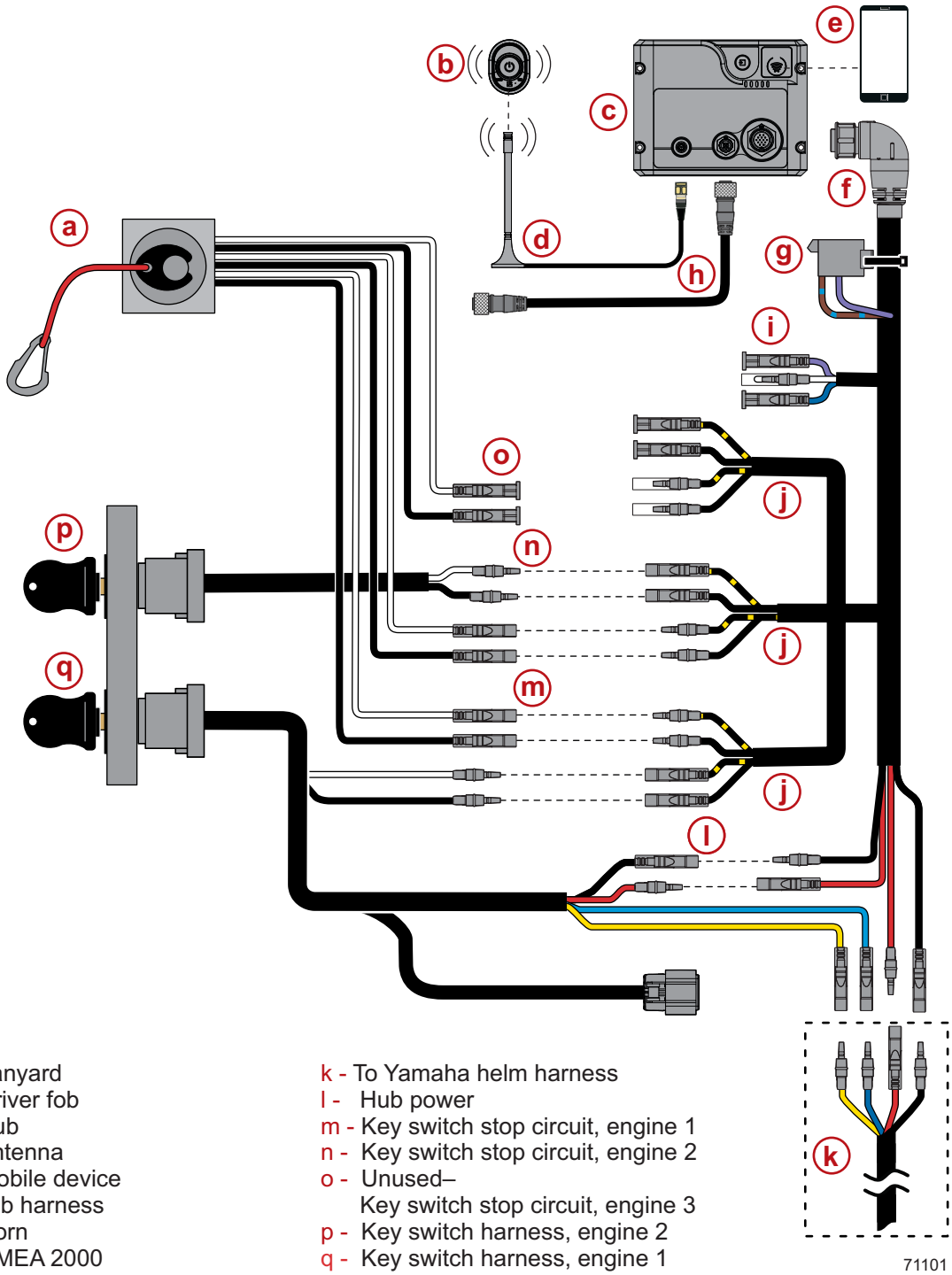


a - Lanyard
b - Driver fob
c - Hub
d - Antenna
e - Mobile device
f - Hub harness
g - Horn
h - NMEA 2000
i - Future use
j - Lanyard connectors

k - To Yamaha helm harness
l - Hub power
m - Key switch stop circuit, engine 1
n - Key switch stop circuit, engine 2
o - Unused–
Key switch stop circuit, engine 3
p - Key switch harness, engine 2
q - Key switch harness, engine 1